Building Inspection Division
THESE PLANS HAVE BEEN REVIEWED FOR COMPLIANCE WITH THE CURRENT EDITION OF THE FLORIDA BUILDING CODE
Lakeland
Date: 11/15/19
Permit Number: BLD19-06035

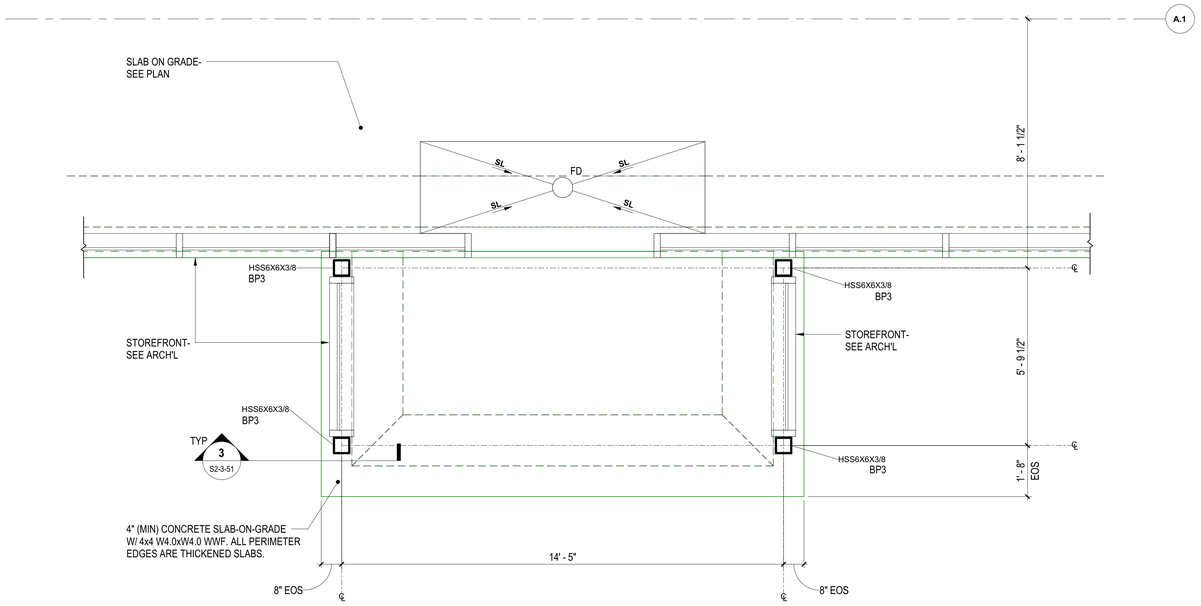

1 ENLARGED CANOPY FOUNDATION PLAN

S2-3-51 | REF: S2-3-11 | SCALE: 1/2" = 1'-0"

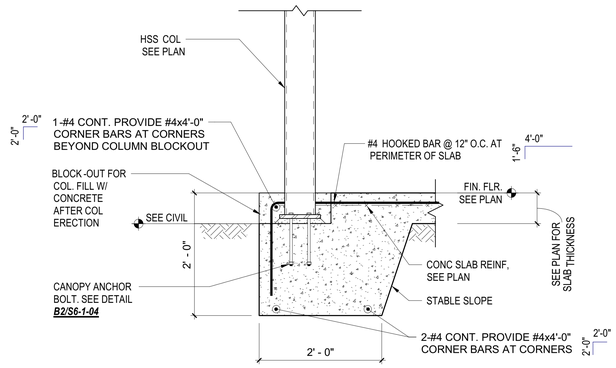

CANOPY COLUMN SECTION

3 CANOPY FOUNDATION SECTION

S2-3-51 | REF: S2-3-51 | SCALE: 1" = 1'-0"

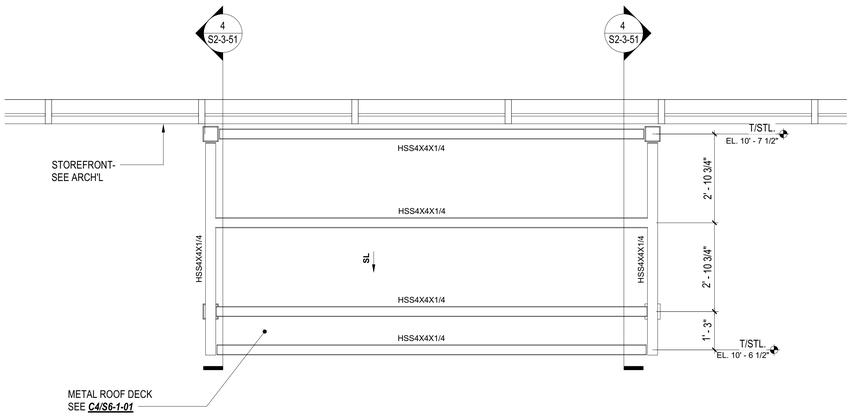

2 ENLARGED CANOPY ROOF PLAN

S2-3-51 | REF: S2-3-50 | SCALE: 1/2" = 1'-0"

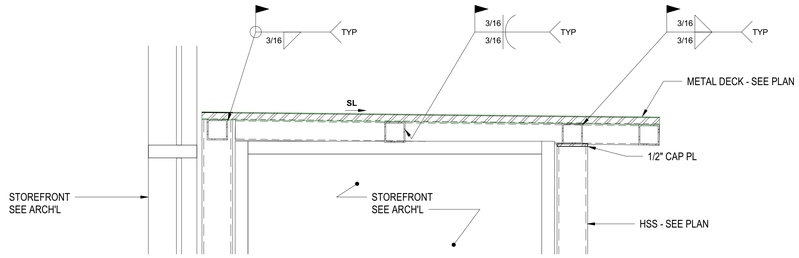

NOTE:
REFER TO ARCHITECTURAL DRAWINGS FOR ROOFING, SOFFIT, AND FLASHING INFORMATION NOT SHOWN IN THIS SECTION.

4 CANOPY ROOF SECTION

S2-3-51 | REF: S2-3-51 | SCALE: 1" = 1'-0"

AECOM
BATSON-COOK CONSTRUCTION

PROJECT

PUBLIX HEADQUARTERS BUILDING ADDITION AND PARKING LOT EXPANSION

3300 PUBLIX CORPORATE PARKWAY
LAKELAND, FL 33811

CLIENT

Publix

3300 PUBLIX CORPORATE PARKWAY
LAKELAND, FL 33811

www.publix.com

CONSULTANT

AECOM

AECOM TECHNICAL SERVICES, INC.
800 Douglas Entrance
North Tower, 2nd Floor
Coral Gables, FL 33134
305.444.4691 tel 305.447.3580 fax
www.aecom.com

ARCHITECTURE
LICENSE NO. AA26000687

ENGINEERING
CA LIC. NO. 8115

http://www.aecom.com

REGISTRATION

VINCENT RAJ VACCARELLO-WADEHRA, PROFESSIONAL ENGINEER, STATE OF FLORIDA, LICENSE NO. 81224

THIS ITEM HAS BEEN DIGITALLY SIGNED AND SEALED BY VINCENT RAJ VACCARELLO-WADEHRA, PROFESSIONAL ENGINEER, STATE OF FLORIDA, LICENSE NO. 81224 ON THE DATE INDICATED HERE. PRINTED COPIES OF THIS DOCUMENT ARE NOT CONSIDERED SIGNED AND SEALED AND THE SIGNATURE MUST BE VERIFIED ON ANY ELECTRONIC COPIES.

Vincent R Vaccarello-Wadehra

Digitally signed by Vincent R Vaccarello-Wadehra
Date: 2019.08.23 10:54:00 -04'00'

ISSUE/REVISION

I/R	DATE	DESCRIPTION
0	AUGUST 23, 2019	CONSTRUCTION DOCUMENTS

PROJECT NUMBER

60601397

SHEET TITLE

ENLARGED CANOPY PLANS

SHEET NUMBER

S2-3-51

This drawing has been prepared for the use of AECOM's client and may not be used, reproduced or relied upon by third parties, except as agreed by AECOM and its client, as required by law or for use by governmental reviewing agencies. AECOM accepts no responsibility, and denies any liability whatsoever to any party that modifies this drawing without AECOM's express written consent. Do not scale this document. All measurements must be obtained from the stated dimensions.

NOTICE: THE OFFICIAL RECORD OF THIS SHEET IS THE ELECTRONIC FILE SIGNED AND SEALED UNDER RULE 61G15-23.004, F.A.C.

©2016 AECOM Corporation

Printed on ___% Post-Consumer Recycled Content Paper

Last Plotted: 8/23/2019 10:47:56 AM
Filename: BIM 360:60601397-Publix HQ/60601397_Publix HQ_STRUCT_R2019.rvt

Project Management Initials:
Designer: Designer Checked: Checker Approved: Approver ARCH E1 30"x42"